MICRO SWITCH
a Honeywell Division
FED.MFG.CODE 91929

ASSEMBLY PUSHBUTTON SWITCH

CATALOG LISTING
2PB969
FAA-PMA

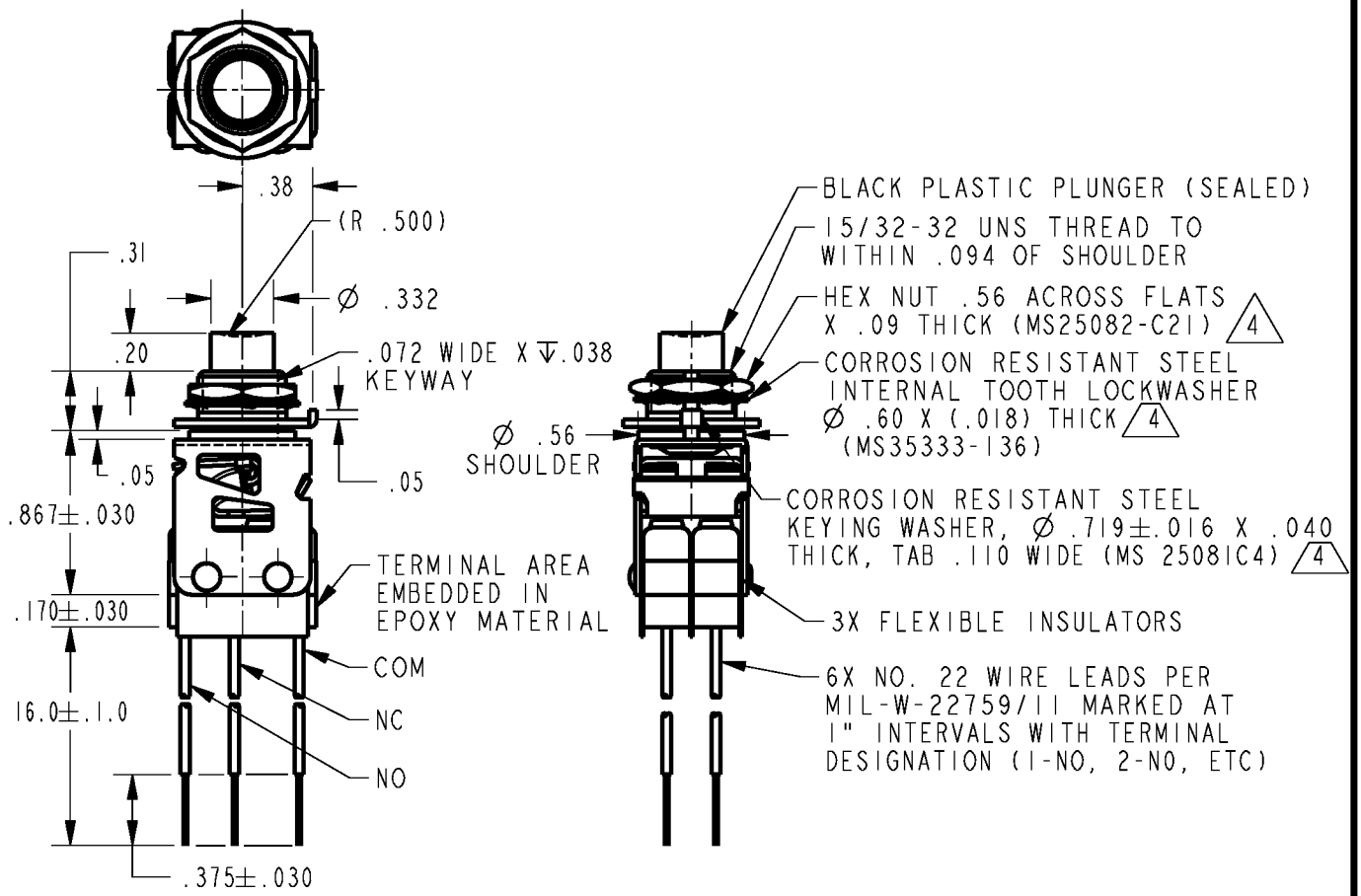

NOTES
1 - UNIT INCLUDES 411SM23 (GOLD BASIC SWITCH CONTACTS)
2 - SWITCHES DO NOT NECESSARILY OPERATE SIMULTANEOUSLY
3 - 411SM23 CONSTRUCTION PROVIDES SPLASH AND DUST RESISTANCE
4 MOUNTING HARDWARE FURNISHED UNASSEMBLED

ANSI Y14.5M-1982 APPLIES

THIS DRAWING COVERS A PROPRIETARY ITEM AND IS THE PROPERTY OF MICRO SWITCH, A DIVISION OF HONEYWELL. THIS DRAWING IS NOT TO BE COPIED OR USED WITHOUT THE APPROVAL OF MICRO SWITCH.

THIRD ANGLE PROJECTION

CHARACTERISTICS	ELECTRICAL DATA	SCALE FULL / DO NOT SCALE PRINT
OPERATING FORCE ---------- 2 - 5 LBS	CONTACT ARRANGEMENT 2X S P D T	UNLESS OTHERWISE SPECIFIED TOLERANCES ARE
DIFFERENTIAL FORCE	30 VOLTS DC RATING	ONE PLACE (.0) ±.030
RELEASE FORCE	INDUCTIVE------SEA LEVEL-1/2 AMP	TWO PLACE (.00) ±.015
PRETRAVEL ---------- .040 APPROX	50,000 FT-1/2 AMP	THREE PLACE (.000) ±.005
DIFFERENTIAL TRAVEL	RESISTIVE------SEA LEVEL---1 AMP	ANGLES ±
OVERTRAVEL	50,000 FT---1 AMP	WEIGHT
FREE POSITION	MAXIMUM INRUSH----------2 AMP	
TOTAL TRAVEL ---------- .100 APPROX		

2PB969 CATALOG LISTING PAGE 1 OF 1
RELEASE NO. PR-20191-T REPLACES
ISSUE 6
REVISIONS
A CO-94193 S A V 5 MAY 99
CHECK
CHECK 05MAY99
CHECK JAF
CHECK 05MAY99
DRAWN S A V 05MAY99
PTC/CAD 2D