PRODUCT NO.
10067847-0XXXLF

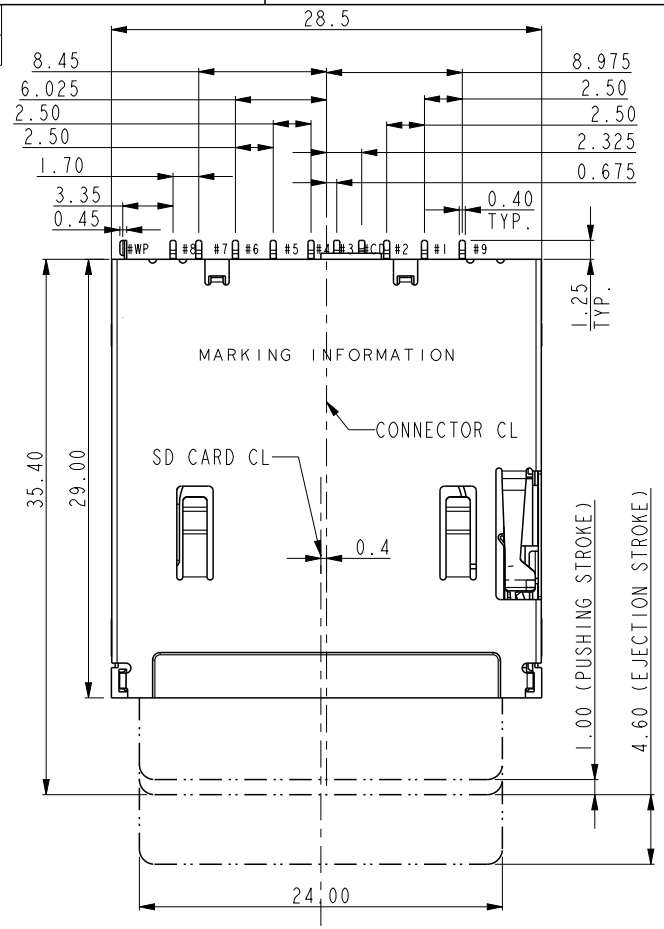

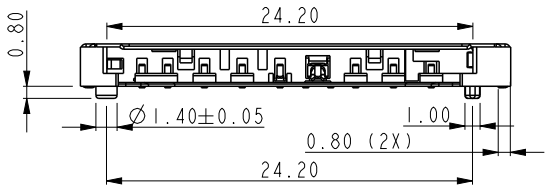

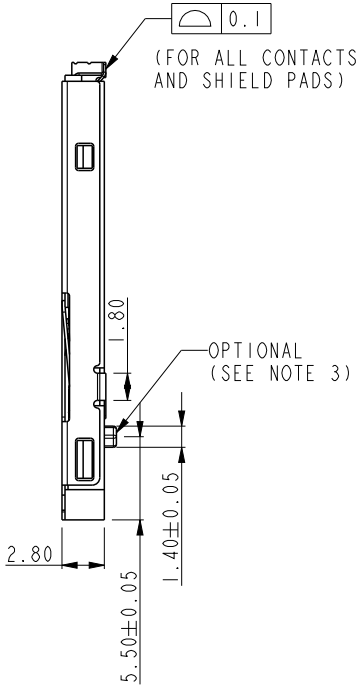

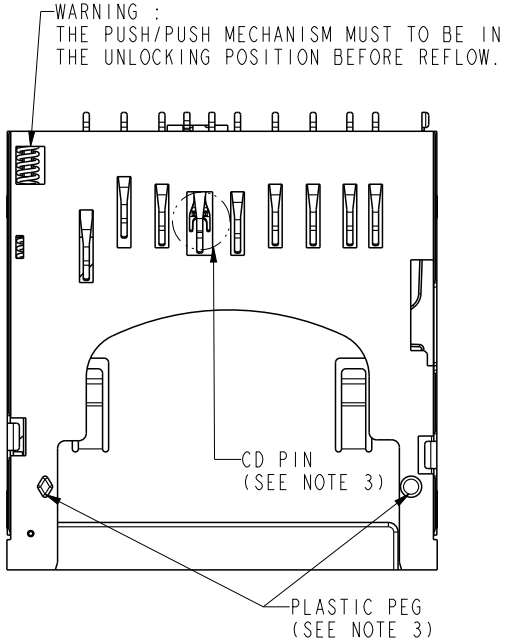

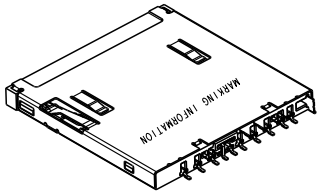

rev	ecn no	dr	date
A	DG08-0034	JC	02-04-08
B	DG08-0190	BL	09-03-08
C	DG08-0289	BL	10-29-08
D	DG09-0050	BL	02-25-09
E	DG09-0158	BL	05-18-09
F	DG09-0258	BL	10-19-09
G	ELX-DG-012660-1	AL	2012-08-28
H	ELX-N-14385	HE	2013-05-22

spec ref	RELEASED	dr	Bill Lin	2008/09/28	projection
tolerance std ASME Y14.5	TOLERANCES UNLESS OTHERWISE SPECIFIED	eng	Henry Guo	2013/09/02	MM
		chr	-	-	
		appr	Rick Bian	2013/09/04	product family SD

size	A4	scale	1.000
ecn no	ELX-N-14385-1		
rel level	Released		

surface	-	linear	0.X ±0.30
			0.XX ±0.20
			0.XXX ±0.10
		angular	0° ±2°

www.fci.com

title: ASSEMBLY
SD CARD READER

dwg no: 10067847

rev: H

cat. no. 10067847 | Product - Customer Drw | sheet 1 of 3

Copyright FCI.

Pro/E File - REV C - 2009-06-09

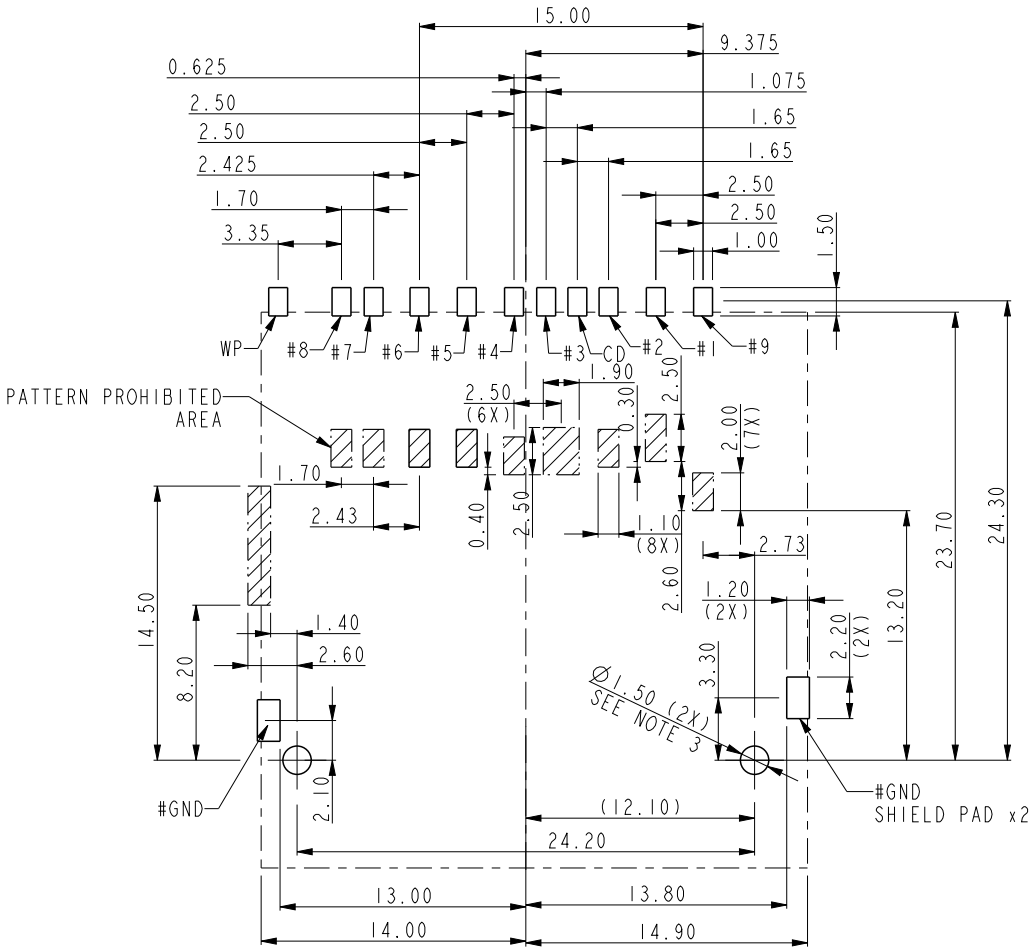

RECOMMENDED PCB LAYOUT
(FOR 10067847-0XXXLF)

dr	Bill Lin	2008/09/28	projection	MM	size A4	scale 1.000
eng	Henry Guo	2013/09/02				
chr	-	-			ecn no	ELX-N-14385-1
appr	Rick Bian	2013/09/04	product family	SD	rel level	Released
FCI	title ASSEMBLY SD CARD READER		dwg no 10067847		rev H	
www.fci.com	cat. no. 10067847		Product - Customer Drw		sheet 2 of 3	

Copyright FCI.

NOTES:

1.MATERIAL
- HOUSING : HIGH TEMPERATURE THERMOPLASTIC RESIN.
- CONTACT : COPPER ALLOY
- SHIELD : STAINLESS.

2 PLATING:
- CONTACT : 50u" NICKEL UNDERPLATED ALL OVER.
  100u" MATTE TIN ON SOLDER TAIL AREA.
  GOLD PLATED ON CONTAT AREA (SEE CONTACT PLATING IN NOTE 3).

3.PART NUMBER DESCRIPTION:

10067847-X X X X X

- LF: LEAD FREE
- R : TAPE & REEL
- T : TRAY PACKAGING
- CONTACT PLATING :
  1: 50u" Au OVER Ni
- 0: WITH PLASTIC PEG
  1: WITHOUT PLASTIC PEG
- 0: CD PIN LAST MATE FIRST BREAK

4 MARKING INFORMATION

PXXXXXXXXXXX

- V2: UD321 LUBRICANT
  V3: UD321 LUBRICANT WITH ENGINEERING CHANGE BASED ON PCN09116.
- PRODUCTION LINE CODE
- DATE CODE THROUGH 01 TO 31
- WEEK NUMBER 01 THROUGH 53
- YEAR CODE:
  MOST RIGHT OF DIGIT OF PRODUCTION.
  (e.g. 2008=8)
- MANUFACTURE SITE;1.FOR NANTONG 2 FOR DONGGUAN
- SOURCE; P FOR CHINA

PIN ASSIGNMENT

NO.	DESCRIPTION
#1	CD/DAT3
#2	CMD
#3	VSS
#4	VDD
#5	CLK
#6	VSS
#7	DAT0
#8	DAT1
#9	DAT2
#CD	CARD DETECTION
#WP	WRITE PROTECT
#GND	GROUND

CIRCUIT :

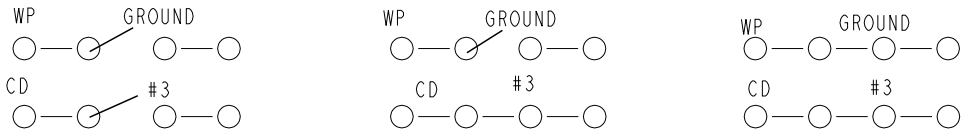

WITHOUT CARD

CARD INSERTED
WRITE PROTECT:LOCK

CARD INSERTED
WRITE PROTECT:UNLOCK

dr	Bill Lin	2008/09/28	projection	MM	size A4 / scale 1.000
eng	Henry Guo	2013/09/02			ecn no ELX-N-14385-1
chr	-	-			
appr	Rick Bian	2013/09/04	product family SD		rel level Released

title: ASSEMBLY
SD CARD READER

dwg no: 10067847

rev: H

www.fci.com | cat. no. 10067847 | Product - Customer Drw | sheet 3 of 3

Copyright FCI.

Pro/E File - REV C - 2009-06-09